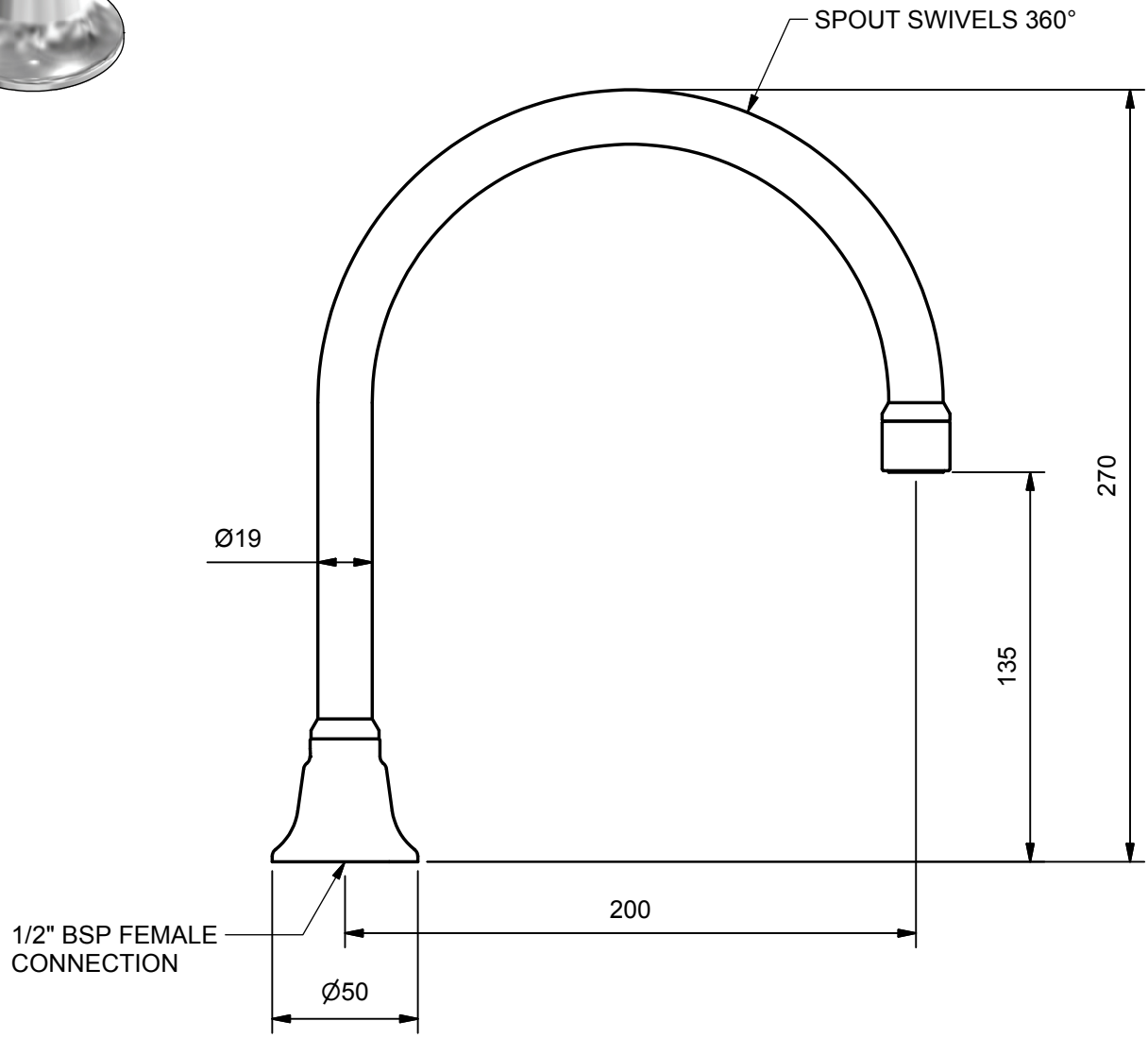

RAM TAPWARE HARBIC BRASSWARE

As part of Ramtaps commitment to quality products, Ramtaps reserves the right to alter the design or specification of it's products without notice.

RAMTAPS PTY. LTD.
556 Curtin Ave. East. Eagle Farm 4009.
Ph. (07) 3633 6000. Fax (07) 3633 6050.

© 2009 All dimensions in mm.
This drawing remains the property of Ramtaps and should not be copied or distributed without Ramtaps consent.

Title

DORSET / SX HOB SPA SPOUT 200mm

Code:	*Edition*	Date of Issue:
PRSPH8CP	01	22/03/2011