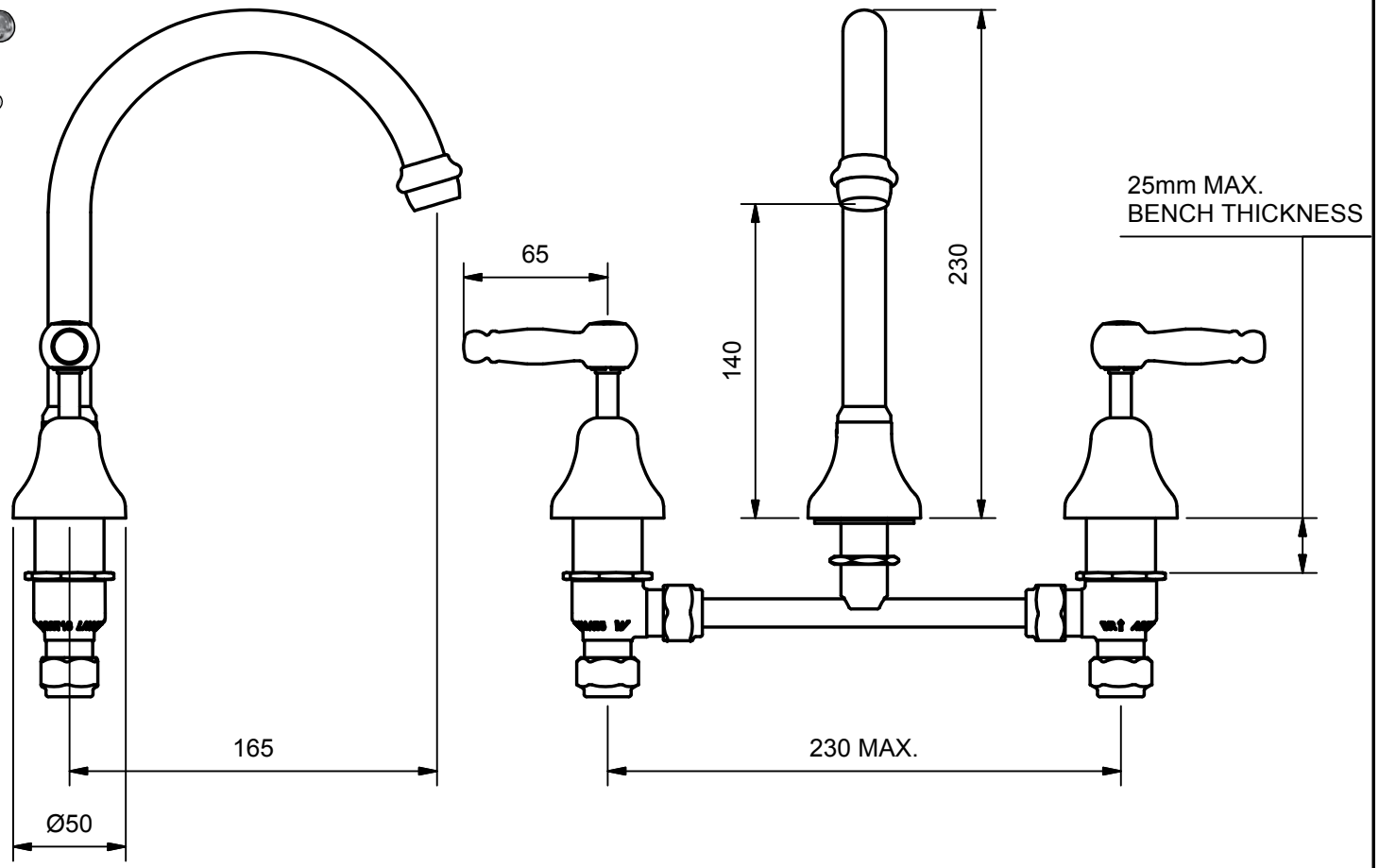

Headworks Available:
Ceramic Disc 1/4 Turn (Standard)
Ramseal (Optional)

Handles are *Secure Fit* - Fit with key supplied.

Maximum Hydrostatic Pressure: 1000kpa
Minimum Hydrostatic Pressure: 150kpa
Maximum Water Temperature: 80°c

Mounting Holes:

- Taps - Min Ø32mm

- Spout - Min Ø21mm

AVAILABLE WELS RATING & WELS REGISTRATION:

SINK: 4 STAR - 7.5 LPM & WELS Reg. Number - T24464

RAM TAPWARE HARBIC BRASSWARE

As part of Ramtaps commitment to quality products, Ramtaps reserves the right to alter the design or specification of it's products without notice.

RAMTAPS PTY. LTD.
556 Curtin Ave. East. Eagle Farm 4009.
Ph. (07) 3633 6000. Fax (07) 3633 6050.

© 2009 All dimensions in mm.
This drawing remains the property of Ramtaps and should not be copied or distributed without Ramtaps consent.

Title		
MERINO LEVER HANDLE VANITEE SINK SET		
Code: MLCDFBVSSCP	Edition 02	Date of Issue: 8/08/2016